EVERLIGHT
LIGHTING FOREVER

Technical Data Sheet

339-9SURSUBSUGC/S1285

Features

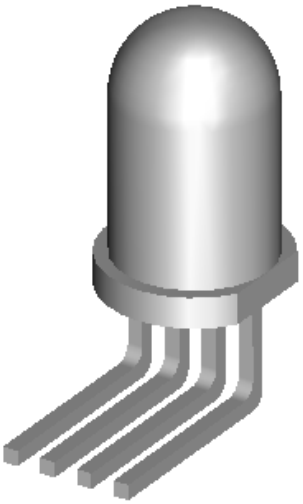

- Popular T-1 3/4 round package.
- Common cathode.
- Built in red, green, and blue chips.
- Selected minimum intensities.
- Available on tape and reel.
- The product itself will remain within RoHS compliant version

Descriptions

- The series is specially designed for applications requiring higher brightness
- The LED lamps are available with different colors, intensities, epoxy, colors, etc.
- Status indicators.
- Commercial use.
- Advertising Signs.
- Computer

Applications

- Status indicators.
- Commercial use.
- Advertising Signs.
- Computer

CONFIDENTIAL

Device Selection Guide

LED Part No.	Chip		Lens Color
	Material	Emitted Color	
339-9SURSUBSUGC/S1285	InGaN	Brilliant Green	Water clear
	AlGaInP	Brilliant Red	
	InGaN	Blue	

Technical Data Sheet

339-9SURSUBSUGC/S1285

Package Dimensions

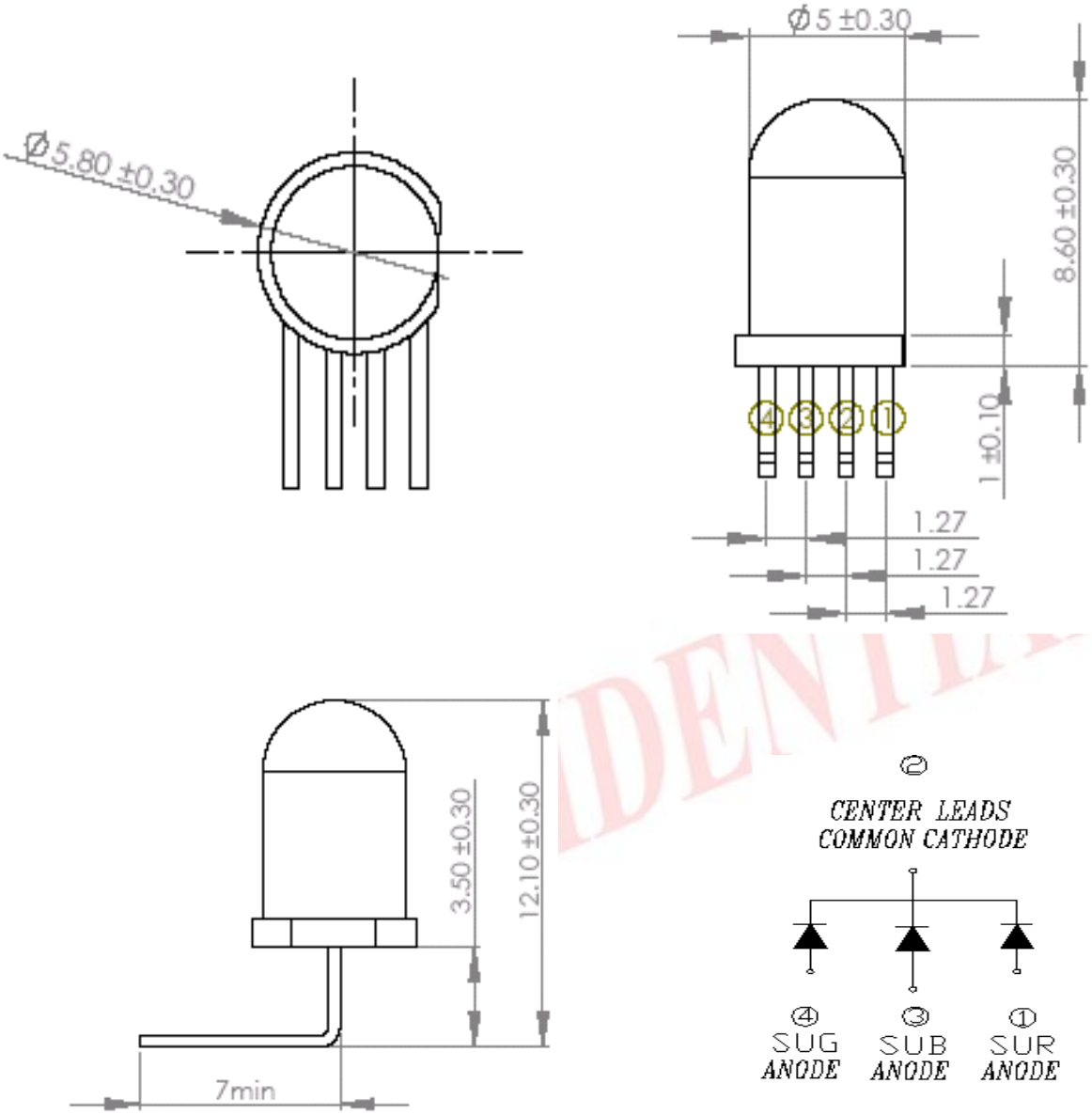

Notes:

- All dimensions are in millimeters, tolerance is 0.25mm except being specified.
- Protruded resin under flange is 1.5mm Max LED.

EVERLIGHT
LIGHTING FOREVER

Technical Data Sheet

339-9SURSUBSUGC/S1285

Absolute Maximum Ratings (Ta=25℃)

Parameter	Symbol	SUB/SUG	SUR	Units
Forward Current	I_F	30	50	mA
Pulse Forward Current (Duty1/10@ 1KHz)	I_{FP}	100	100	mA
Operating Temperature	T_{opr}	-40 ~ +85		℃
Storage Temperature	T_{stg}	-40 ~ +100		℃
Electrostatic Discharge	ESD	150	2000	V
Soldering Temperature	T_{sol}	260		℃
Power Dissipation	P_d	100	120	mW
Reverse Voltage	V_R	5		V

*Notes: Soldering time≦5 seconds.

CONFIDENTIAL

EVERLIGHT
LIGHTING FOREVER

Technical Data Sheet

339-9SURSUBSUGC/S1285

Electro-Optical Characteristics (Ta=25℃)

Parameter	Symbol	Color	Min.	Typ.	Max.	Unit	Condition
Luminous Intensity	I_V	SUR	450	900	1425	mcd	I_F=20mA
		SUB	715	1300	1800		
		SUG	2250	3900	5650		
Viewing Angle	2θ1/2	---	---	35	---	deg	
Peak Wavelength	λp	SUR	---	632	---	nm	
		SUB	---	468	---		
		SUG	---	512	---		
Dominant Wavelength	λ_D	SUR	620	624	628		
		SUB	465	470	475		
		SUG	525	530	535		
Spectrum half-width	△λ	SUR	---	20	---		
		SUB	---	25	---		
		SUG	---	35	---		
Forward Voltage	V_F	SUR	1.8	2.2	2.6	V	
		SUB	2.8	3.2	3.6		
		SUG	2.8	3.2	3.6		
Reverse Current	I_R	SUR	---	---	10	μA	V_R=5V
		SUB	---	---	50		
		SUG	---	---	50		

*Measurement Uncertainty of Forward Voltage: ±0.1V
*Measurement Uncertainty of Luminous Intensity: ±10%
*Measurement Uncertainty of Dominant Wavelength ±1.0nm

CONFIDENTIAL

EVERLIGHT
LIGHTING FOREVER

Technical Data Sheet

339-9SURSUBSUGC/S1285

Rank Combination (I_F=20mA)

Rank	R		B		G	
Luminous Intensity	H	G	H	J	N	P
	450~900	900~1425	715~1000	1000~1800	2250~3950	3950~5650

*Measurement Uncertainty of Luminous Intensity: ±10% Unit: :mcd

Rank	R		B		G	
Dominant Wavelength	1	2	1	1	1	2
	620~624	624~628	465~470	470~475	525~530	530~535

*Measurement Uncertainty of Dominant Wavelength ±1.0nm Unit:nm

CONFIDENTIAL

EVERLIGHT
LIGHTING FOREVER

Technical Data Sheet

339-9SURSUBSUGC/S1285

Typical Electro-Optical Characteristics Curves

Relative Intensity vs. Wavelength

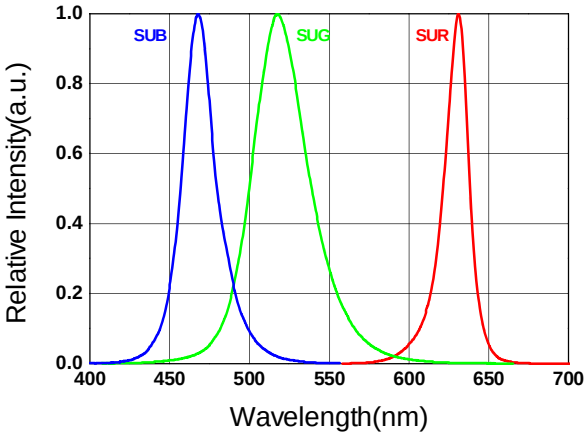

Forward Current vs. Forward Voltage

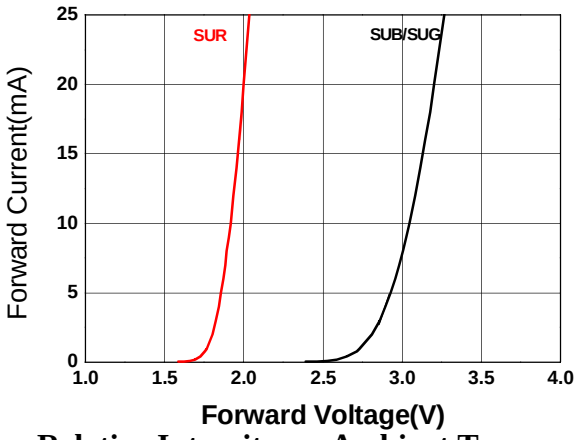

Relative Intensity vs. Forward Current

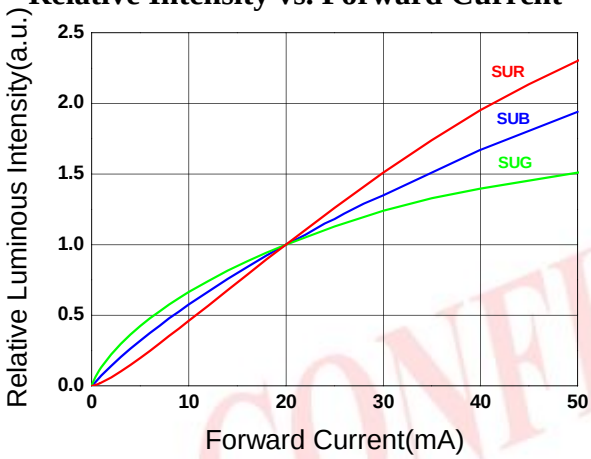

Relative Intensity vs. Ambient Temp.

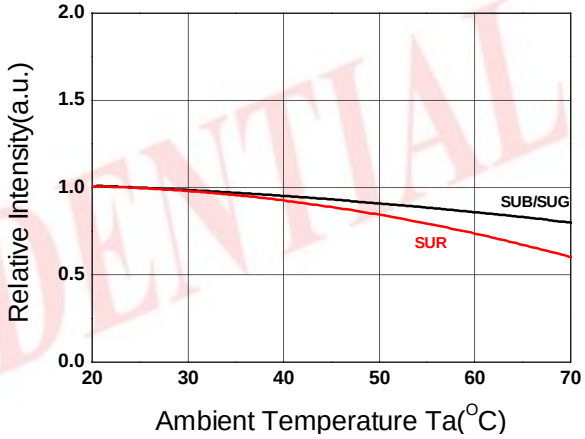

Forward Current vs. Ambient Temp.

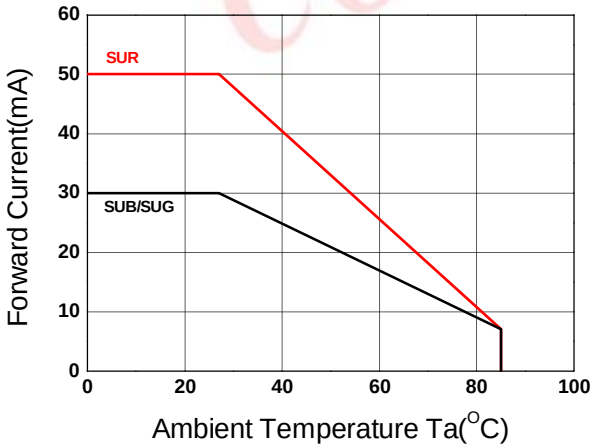

Relative Intensity vs. Angle Displacement

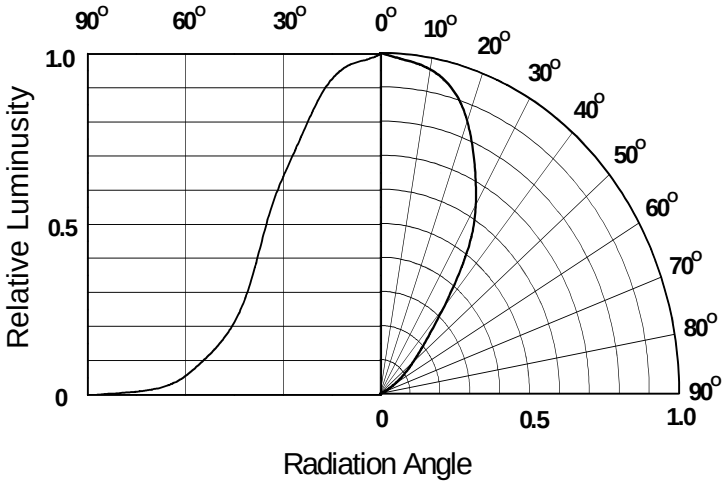

CONFIDENTIAL

EVERLIGHT
LIGHTING FOREVER

Technical Data Sheet

339-9SURSUBSUGC/S1285

Packing Specification

■ Anti-electrostatic bag

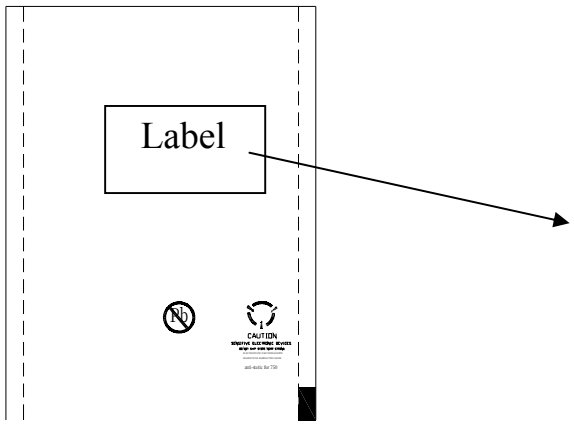

■ Inner Carton

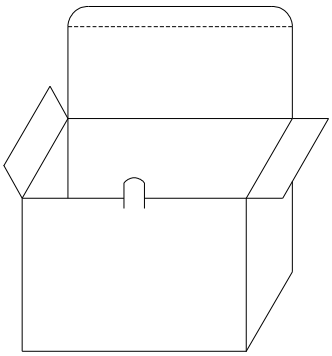

■ Outside Carton

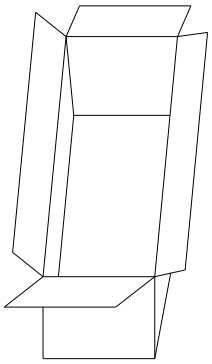

■ Label Form Specification

CPN: Customer's Production Number
P/N : Production Number
QTY: Packing Quantity
CAT: Rank of Luminous Intensity
HUE: Rank of Dominant Wavelength
REF: Reference
LOT No: Lot Number
MADE IN TAIWAN: Production Place

■ Packing Quantity

1. 500 PCS/1 Bag, 5 Bags/1 Inner Carton
2. 10 Inner Cartons/1 Outside Carton

CONFIDENTIAL

EVERLIGHT
LIGHTING FOREVER

Technical Data Sheet

339-9SURSUBSUGC/S1285

Notes

1. Lead Forming
   - During lead formation, the leads should be bent at a point at least 3mm from the base of the epoxy bulb.
   - Lead forming should be done before soldering.
   - Avoid stressing the LED package during leads forming. The stress to the base may damage the LED's characteristics or it may break the LEDs.
   - Cut the LED leadframes at room temperature. Cutting the leadframes at high temperatures may cause failure of the LEDs.
   - When mounting the LEDs onto a PCB, the PCB holes must be aligned exactly with the lead position of the LED. If the LEDs are mounted with stress at the leads, it causes deterioration of the epoxy resin and this will degrade the LEDs.
2. Storage
   - The LEDs should be stored at 30°C or less and 70%RH or less after being shipped from Everlight and the storage life limits are 3 months. If the LEDs are stored for 3 months or more, they can be stored for a year in a sealed container with a nitrogen atmosphere and moisture absorbent material.
   - Please avoid rapid transitions in ambient temperature, especially, in high humidity environments where condensation can occur.
3. Soldering
   - Careful attention should be paid during soldering. When soldering, leave more then 3mm from solder joint to epoxy bulb, and soldering beyond the base of the tie bar is recommended.

CONFIDENTIAL

EVERLIGHT
LIGHTING FOREVER

Technical Data Sheet

339-9SURSUBSUGC/S1285

- Recommended soldering conditions:

Hand Soldering		DIP Soldering	
Temp. at tip of iron	300℃ Max. (30W Max.)	Preheat temp.	100℃ Max. (60 sec Max.)
Soldering time	3 sec Max.	Bath temp. & time	260 Max., 5 sec Max
Distance	3mm Min.(From solder joint to epoxy bulb)	Distance	3mm Min. (From solder joint to epoxy bulb)

- Recommended soldering profile

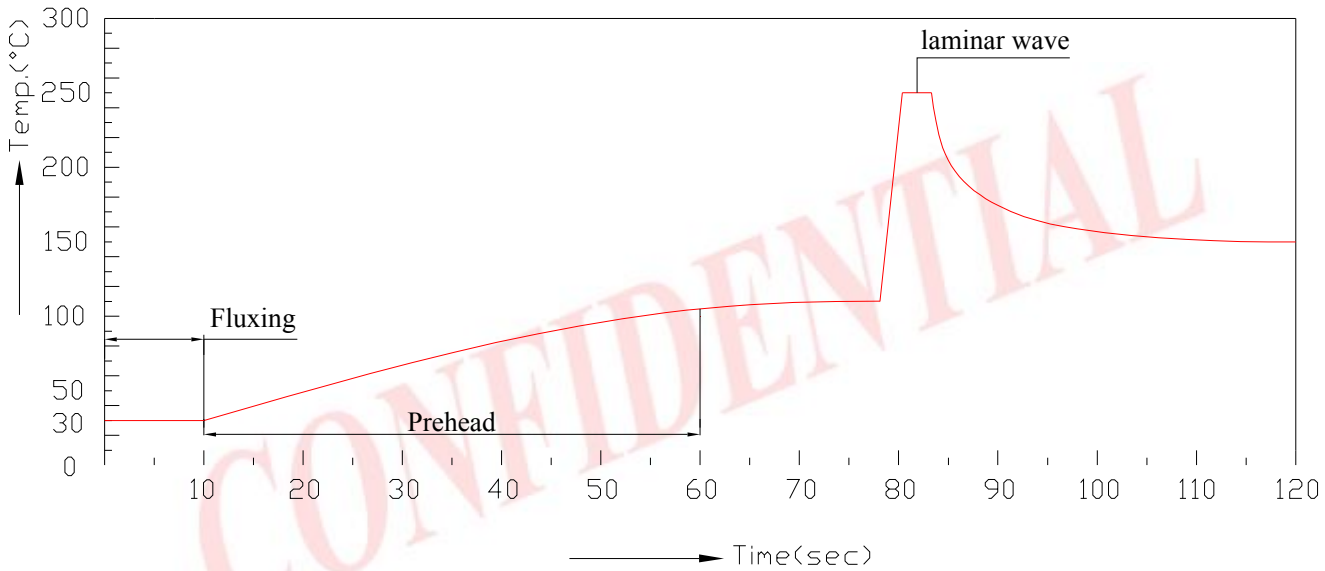

CONFIDENTIAL

- Avoiding applying any stress to the lead frame while the LEDs are at high temperature particularly when soldering.
- Dip and hand soldering should not be done more than one time
- After soldering the LEDs, the epoxy bulb should be protected from mechanical shock or vibration until the LEDs return to room temperature.
- A rapid-rate process is not recommended for cooling the LEDs down from the peak temperature.

- Although the recommended soldering conditions are specified in the above table, dip or handsoldering at the lowest possible temperature is desirable for the LEDs.
- Wave soldering parameter must be set and maintain according to recommended temperature and dwell time in the solder wave.

4. Cleaning
   - When necessary, cleaning should occur only with isopropyl alcohol at room temperature for a duration of no more than one minute. Dry at room temperature before use.
   - Do not clean the LEDs by the ultrasonic. When it is absolutely necessary, the influence of ultrasonic cleaning on the LEDs depends on factors such as ultrasonic power and the assembled condition. Ultrasonic cleaning shall be pre-qualified to ensure this will not cause damage to the LED.

5. Heat Management
   - Heat management of LEDs must be taken into consideration during the design stage of LED application. The current should be de-rated appropriately by referring to the de-rating curve found in each product specification.
   - The temperature surrounding the LED in the application should be controlled. Please refer to the data sheet de-rating curve.

6. ESD (Electrostatic Discharge)
   - Electrostatic discharge (ESD) or surge current (EOS) can damage LEDs.
   - An ESD wrist strap, ESD shoe strap or antistatic gloves must be worn whenever handling LEDs.
   - All devices, equipment and machinery must be properly grounded.
   - Use ion blower to neutralize the static charge which might have built up on surface of the LEDs plastic lens as a result of friction between LEDs during storage and handing.

CONFIDENTIAL

Technical Data Sheet

339-9SURSUBSUGC/S1285

7. Other

- Above specification may be changed without notice. EVERLIGHT will reserve authority on material change for above specification.

- When using this product, please observe the absolute maximum ratings and the instructions for using outlined in these specification sheets. EVERLIGHT assumes no responsibility for any damage resulting from use of the product which does not comply with the absolute maximum ratings and the instructions included in these specification sheets.
- These specification sheets include materials protected under copyright of EVERLIGHT corporation. Please don't reproduce or cause anyone to reproduce them without EVERLIGHT's consent.

CONFIDENTIAL

EVERLIGHT ELECTRONICS CO., LTD.
Office: No 25, Lane 76, Sec 3, Chung Yang Rd,
Tucheng, Taipei 236, Taiwan, R.O.C
Tel: 886-2-2267-2000, 2267-9936
Fax: 886-2267-6244, 2267-6189, 2267-6306
http:\\www.everlight.com