Lead (Pb) Free Product – RoHS Compliant

L780-66-60 epoxy lens type Infrared illuminator

L780-66-60 is a wide viewing and extremely high output power illuminator assembled with a total of 60 high efficiency AlGaAs diode chips, mounted on a metal stem TO-66 with AlN ceramics and covered with double coated clear silicone and epoxy resin. These devices are designed for high current operation with proper heat sinking to improve thermal conductive efficiency.

♦ Features

1) High reliability
2) Compact (TO-66) package
3) High output power at 780nm

♦Applications

1) For IR search light
2) For CCD lighting

♦ Specifications

1) Product name	IR illuminator
2) Spec. No.	L780-66-60
3) Chip	
(1) Material	AlGaAs
(2) Peak wavelength	780m
4) Package	
(1) Stem	TO-66 stem with AlN
(2) Lens	Clear silicone and epoxy lens

♦Outer dimension (Unit: mm)

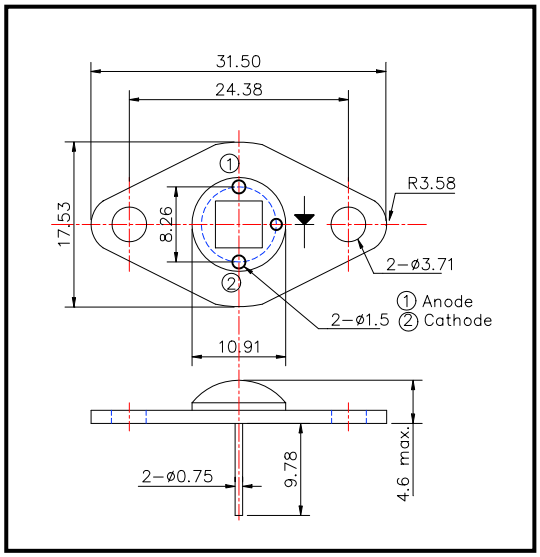

♦Absolute Maximum Ratings

Item	Symbol	Maximum Rated Value	Unit	Ambient Temp.
Power Dissipation	P_D	7.8	W	Ta=25°C
Forward Current	I_F	750	mA	Ta=25°C
Pulse Forward Current	I_{FP}	3	A	Ta=25°C
Reverse Voltage	V_R	50	V	Ta=25°C
Junction Temperature	T_J	100	°C	
Thermal Resistance	Rthjp	5.5	K/W	
Operating Temperature	T_{OPR}	-30 ~ +80	°C	
Storage Temperature	T_{STG}	-30 ~ +110	°C	
Soldering Temperature	T_{SOL}	265	°C	

‡Pulse Forward Current condition: Duty=1% and Pulse Width=1us.
‡Soldering condition: Soldering condition must be completed within 3 seconds at 265°C
‡Thermal Resistance: Junction – Package, mounted on heat sink

♦Electro-Optical Characteristics

Item	Symbol	Condition	Minimum	Typical	Maximum	Unit
Total Radiated Power	P_O	I_F=600mA		1000		mW
Total Radiated Power	P_O	I_F=3A		4000		mW
Radiant Intensity	I_E	I_F=600mA		450		mW/sr
Forward Voltage	V_F	I_F=600mA		9.0		V
Reverse Current	V_R	I_R=10uA	50			V
Peak Wavelength	λ_P	I_F=600mA		780		nm
Half Width	$\Delta\lambda$	I_F=600mA		40		nm
Viewing Half Angle	$\theta_{1/2}$	I_F=600mA		±60		deg.
Rise Time	tr	I_F=600mA		100		ns
Fall Time	tf	I_F=600mA		100		ns

Lead (Pb) Free Product – RoHS Compliant
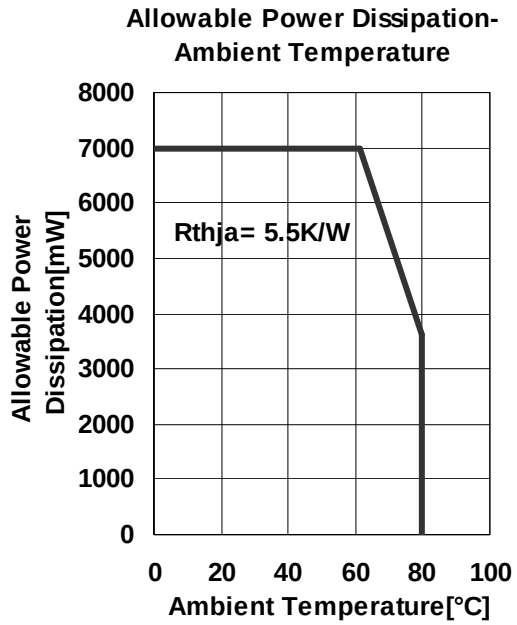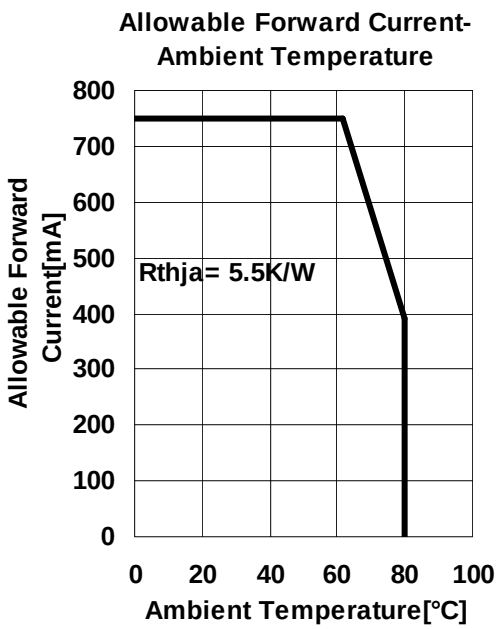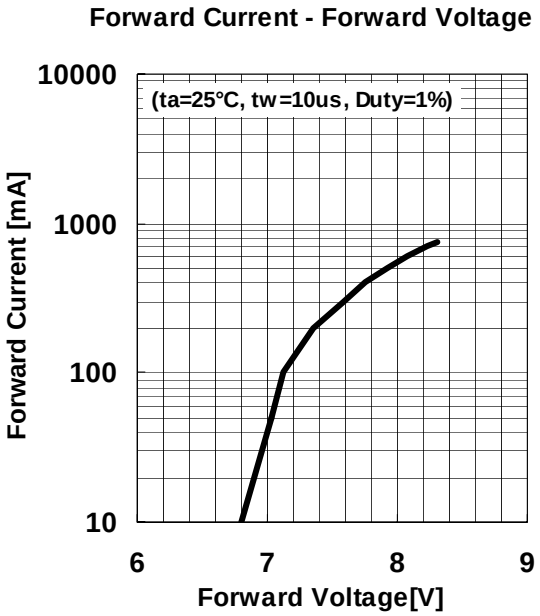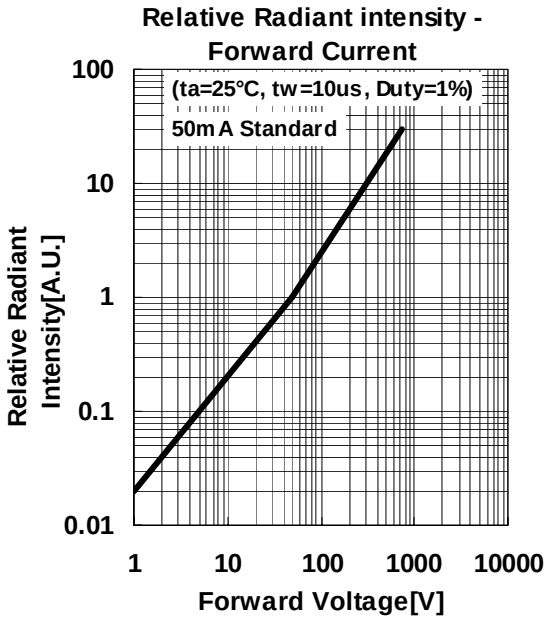
L780-66-60