Ambient Light Sensor

RoHS Compliant

Halogen Free

Features

- Operating temperature from -40°C to +105°C
- Spectral close to human eye response.
- Very low response in infrared region.
- Very low leakage current at high temperature.
- Excellent photo current to dark current ratio.
- Excellent light ratio under different light conditions.

Description

The YC6310 is a high performance current output ambient light sensor (ALS) which combines a photodiode, a high gain current amplifier and dark current cancellation circuit.

YC6310 built-in an optical filter for IR rejection, and providing a spectrum which is close to the human eye's response.

YC6310 has very low leakage current at high temperature, and it also has excellent light ratio performance under different light conditions.

Applications

- Consumer device
  - LCD TV, LCD monitor, toy
- Smart home
  - Smart lighting, smart curtain, night light
- Outdoor
  - Surveillance system, bracket light, street light

Block Diagram

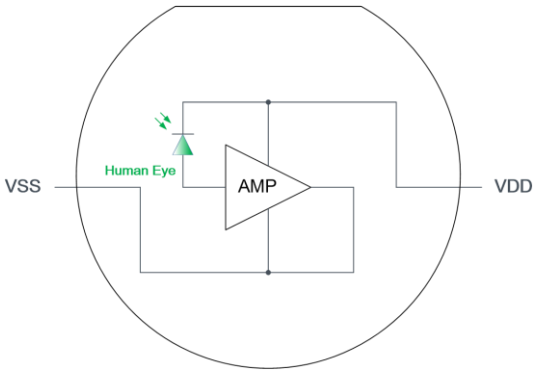

Fig. 1 Block Diagram

Ordering Information

Ordering Code	Packaging	MOQ
YC6310	Bag	500

 © YC 2017

Pins Description

Pin	Pin Name	Description
1	VDD	Cathode node of photodiode
2	VSS	Anode node of photodiode

Absolute Maximum Ratings*

Parameter	Ratings	Unit
Supply Voltage	-0.3 to 8	V
Supply Current	Internally limited	mA
Operating Temperature	-40°C to 105°C	°C
Storage Temperature	-40°C to 125°C	°C
ESD	HBM > 2000	V

*Note: Exceeding these ratings could cause damage to the device.

Recommended Operation Conditions

Parameter	Symbol	Min.	Typ.	Max.	Unit	Condition
Supply Voltage	V_{DD}	2		5.5	V	
Operating Temperature	T_o	-40		105	˚C	

Electrical & Optical Specifications

Unless otherwise specified, the following specifications apply over the operating ambient temperature T=25˚C, VDD = 3.3V.

Parameter	Symbol	MIN	TYP	MAX	Unit	Condition
Photo Current	I_{PH}	20.25 4.05	27 5.4	33.75 6.75	µA µA	E_V = 50 Lux Note1 E_V = 10 Lux
Linearity Error		4.5	5	5.5		I_{PH} 50lux / I_{PH} 10lux
Dark Current	I_{DARK}		0.1 4		nA nA	E_V = 0, Ta = 25°C E_V = 0, Ta = 105°C
Peak Spectral Response	λ_{PEAK}		550		nm	
Infrared Response			0.1		%	% of 940 nm peak
Angle of Half Sensitivity	θ		± 60		deg	
Saturation Voltage	V_{SAT}	1.2	1.8 1.6 1.4	2	V	R_L = 5 KΩ R_L = 10 KΩ R_L = 20 KΩ

Notes:

1. Light source is based on white light LED (CCT = 4000K)

 © YC 2017

Typical Electrical & Optical Characteristics Curves

Unless otherwise specified, the following specifications apply over the operating ambient temperature T = 25˚C, VDD = 3.3V.

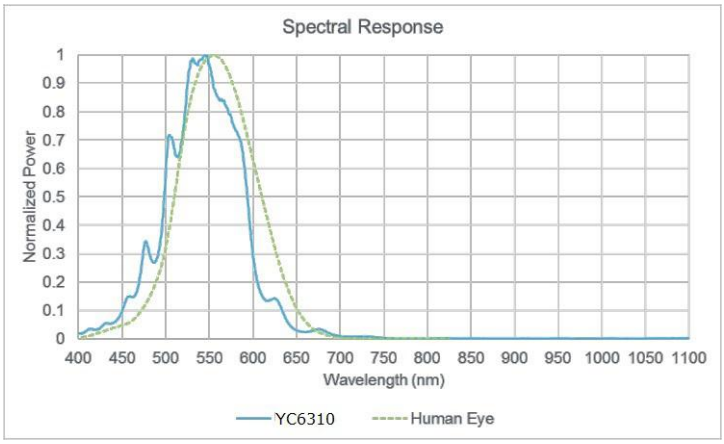

Fig. 2 Spectral Response

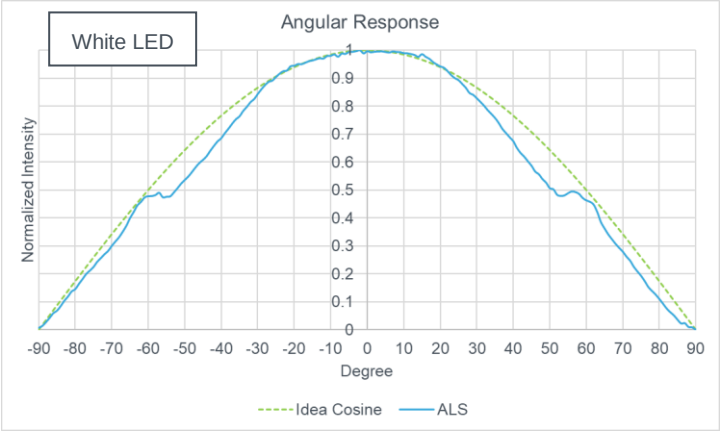

Fig. 3 Normalized intensity vs. angle

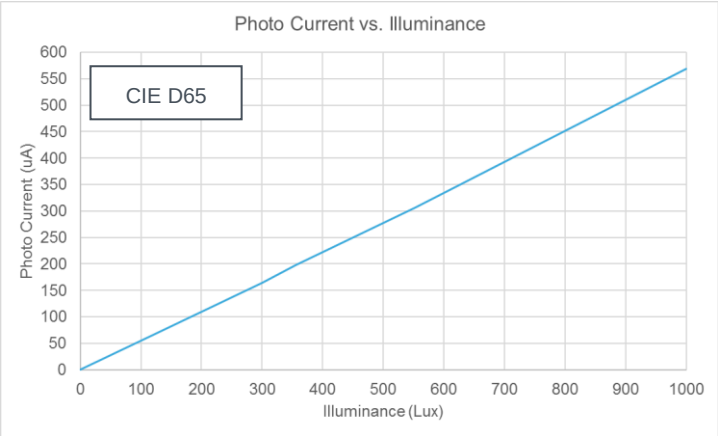

Fig. 4 Photo current vs. illuminance

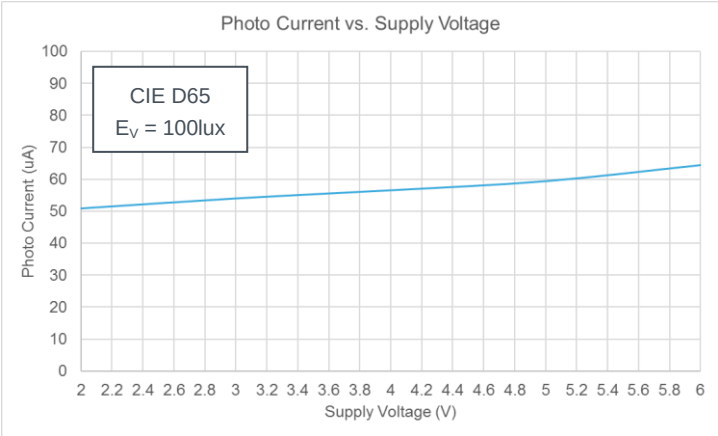

Fig. 5 Photo current vs. supply voltage

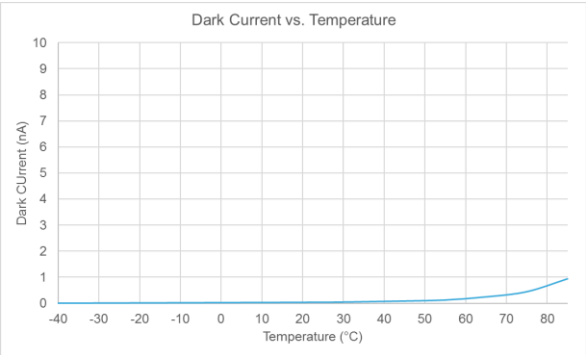

Fig. 6 Dark current vs. temperature

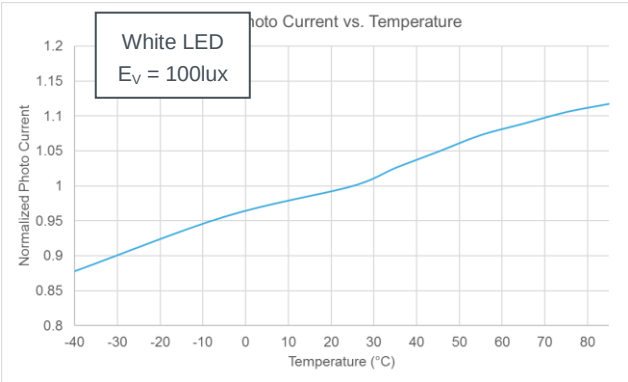

Fig. 7 Relative photo current vs. temperature

 © YC 2017

Application Circuit

Interface Circuit - Basic

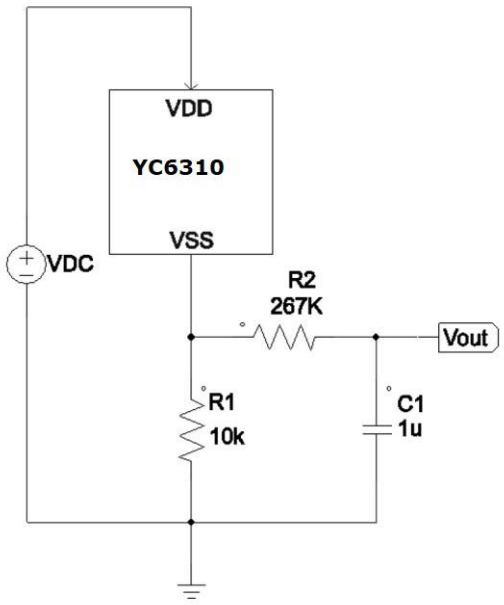

Fig. 8 Interface circuit - basic

Interface Circuit –OP Amplifier

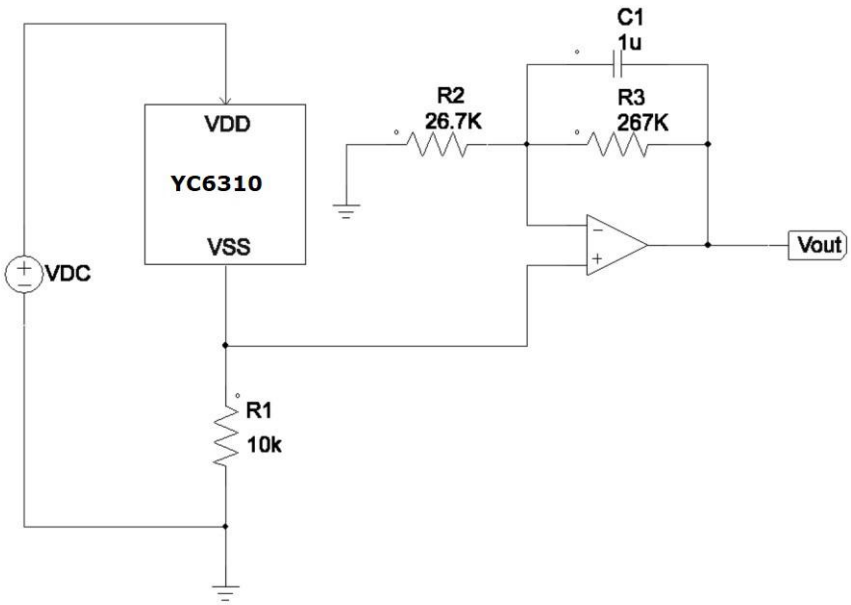

Fig. 9 Interface circuit - OP amplifier

 © YC 2017

LED Driver - Linear

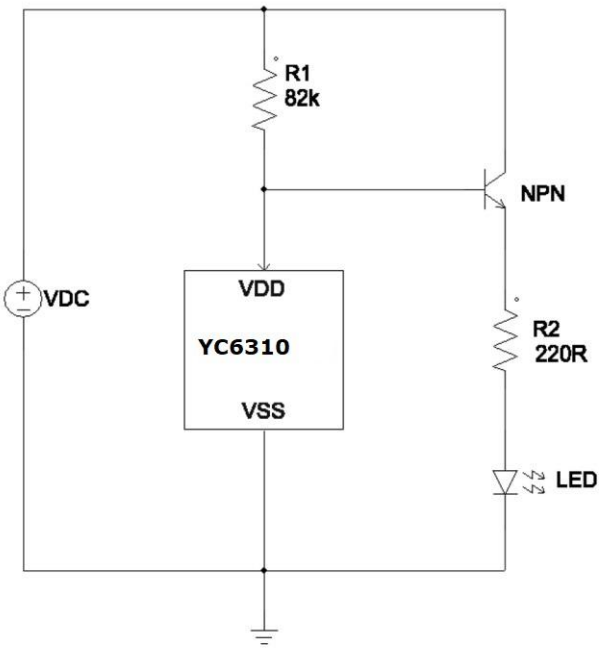

Fig. 10 LED driver - linear

LED Driver – One Threshold

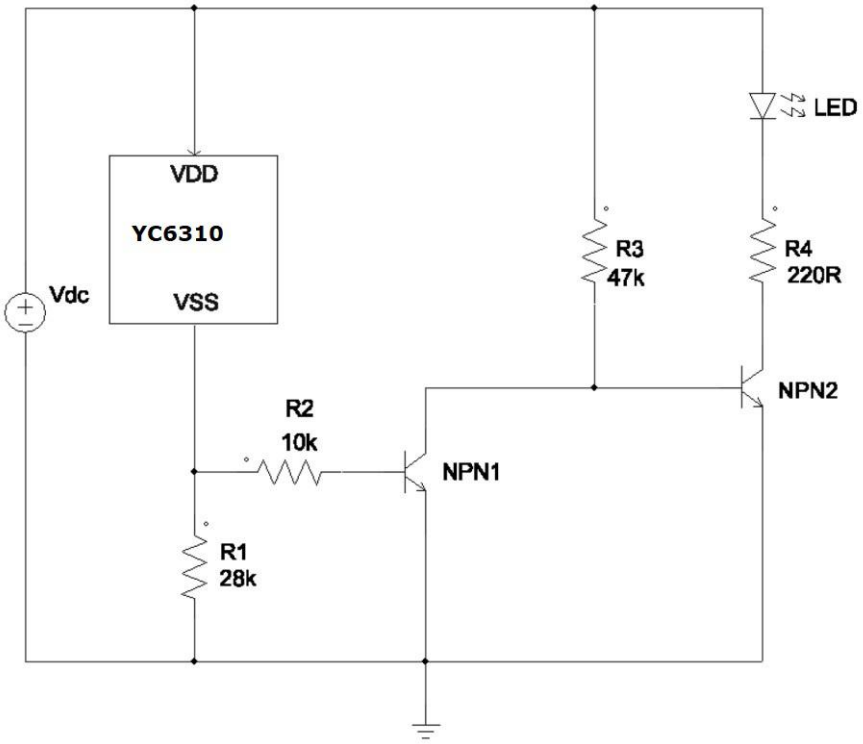

Fig. 11 LED driver - one threshold

 © YC 2017

LED Driver - Hysteresis Threshold

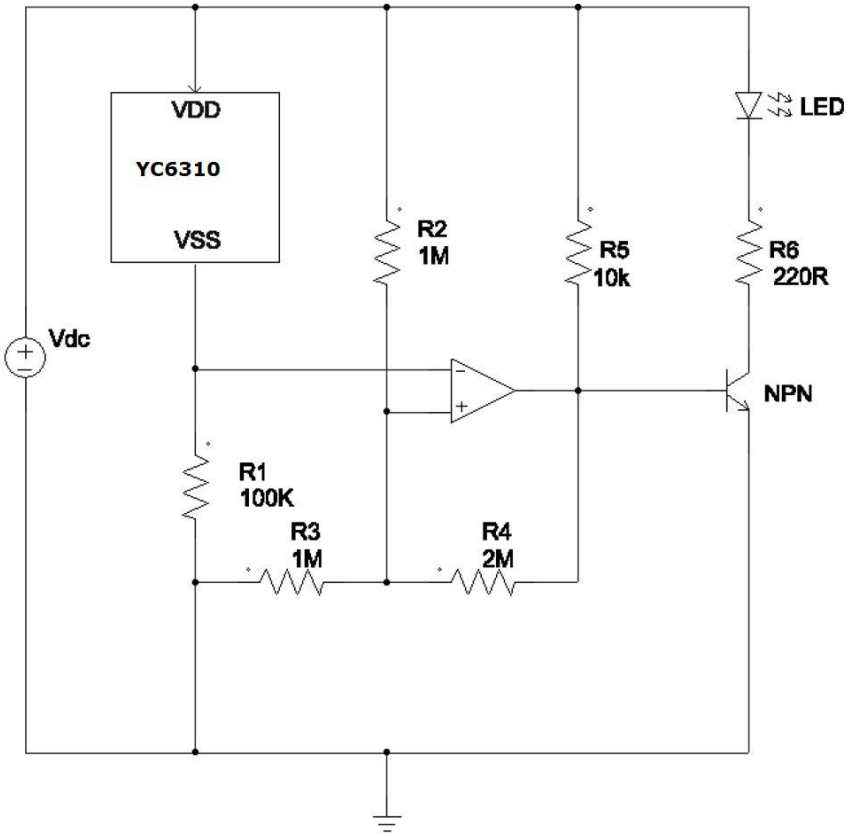

Fig. 12 LED driver - hysteresis threshold

 © YC 2017

Package Outline Dimensions

YC6310 light sensor can be supplied as bare die or package.

PACKAGE OUTLINE DRAW

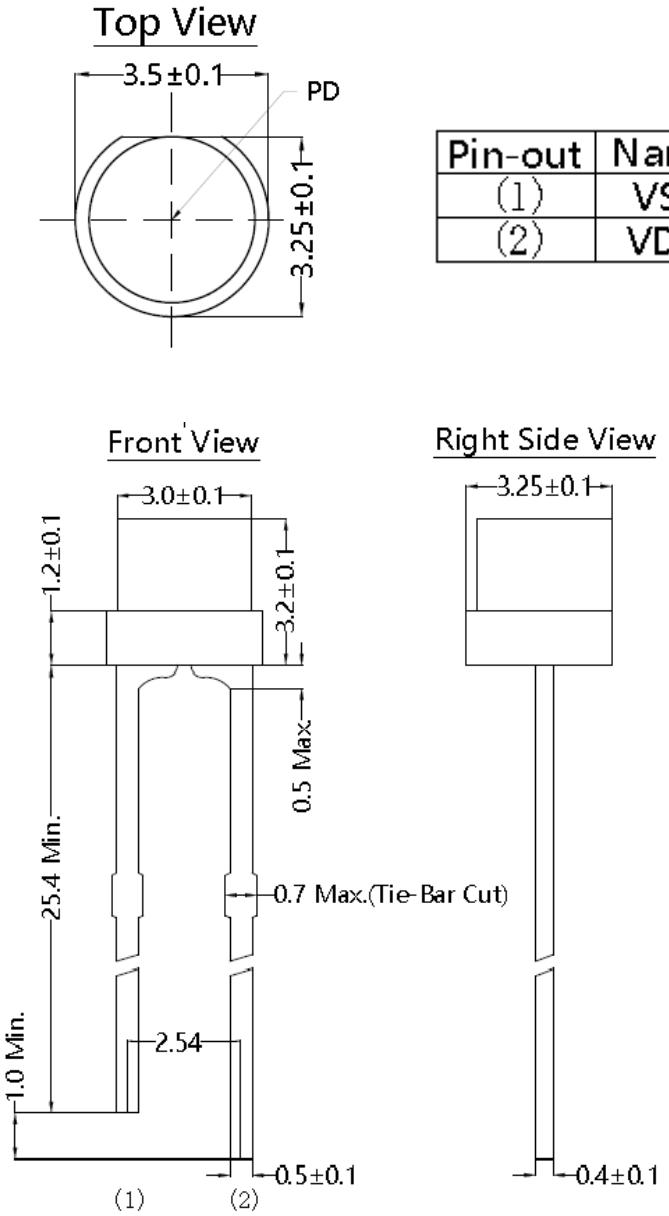

Pin-out	Name
(1)	VSS
(2)	VDD

Notes:

1. All dimensions in millimeters.
2. Dimension tolerance is ± 100 μm unless otherwise noted.

 © YC 2017

Packing Information

Anti-Electrostatic Bag (195 x 170 mm)

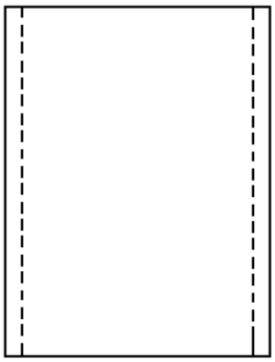

Inner Box (201 x 155 x 80 mm)

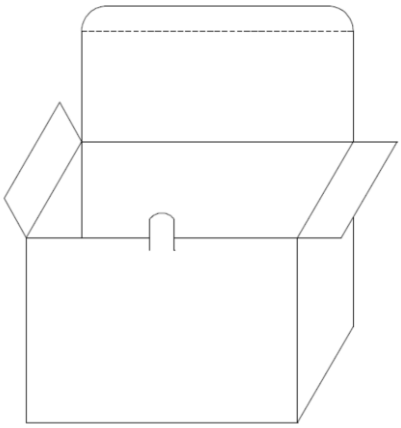

Outside Carton (420 x 270 x 340 mm)

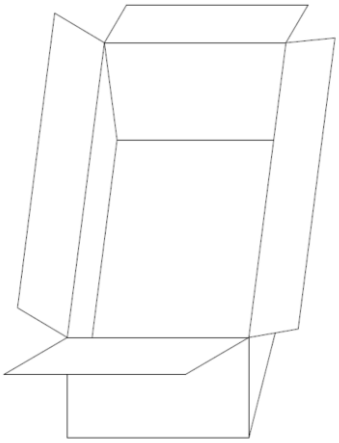

Note :

1. 500 Pcs / 1 Bag
2. 2 Bags / 1 Inner Box
3. 12 Inner Boxes / 1 Outside Carton

 © YC 2017

Recommended Soldering Conditions

Hand Soldering		DIP Soldering	
Temp. at tip of iron	350 °C Max.	Preheat temp. & time	100℃ Max. 60 sec Max.
Soldering time	3 sec Max.	Bath temp. & time	260℃ Max., 5 sec Max.
Distance	3mm Min. from solder joint to epoxy bulb	Distance	3mm Min. from solder joint to epoxy bulb

- When soldering no close than 3mm from solder joint to epoxy bulb, and soldering beyond the base of the tie bar is recommended.
- Avoiding applying any stress to the lead frame when soldering.
- Dip and hand soldering should not be done more than one time.
- After soldering the lamp, the epoxy bulb should be protected from mechanical shock or vibration until the lamp return to room temperature.
- Cut the lead frames at room temperature. Cutting the lead frames at high temperatures may cause failure of the lamp.

 © YC 2017